CONCEPTUAL MODIFICATION WALDEN LAKE COMMUNITY UNIT
PLANT CITY, FLORIDA
SHEET 1 OF 1

The Villages of
WALDEN LAKE
Polo and Country Club

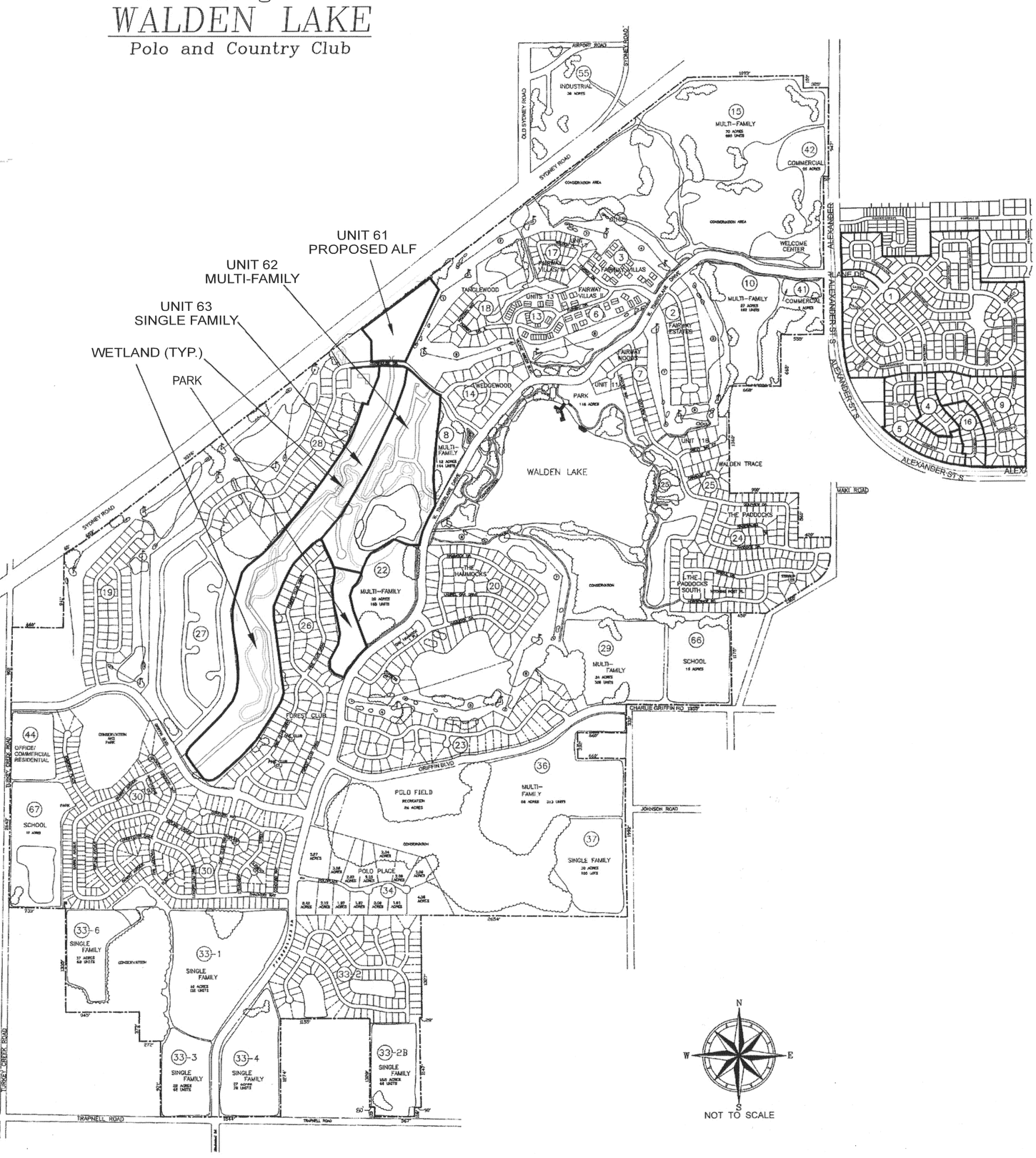

WALDEN LAKE
REVISED COMMUNITY UNIT PLAN
(12-1-89)
UPDATED DEVELOPMENT DATA AS PER PROPOSED C.U. MODIFICAITON
DATED DECEMBER 1, 1989

Land Use	Acreage	Dwelling Units	Gross Avg. Density
Platted Single Family	649.76	1580	2.43 du/ac
Unplatted Single Family	379.0	1103	2.91 du/ac
SINGLE FAMILY SUB-TOTAL	1028.76	2683	2.60 du/ac
Platted Multi Family	30	120	4.0 du/ac
Unplatted Multi Family	221	1755	7.9 du/ac
MULTI FAMILY SUB-TOTAL	251	1875	6.6 du/ac
Commercial	30.5		
Industrial	53.5		
School	34.0		
Golf Course	290.0		
Open Spaces	392.24		
SUB-TOTAL	800.24		
TOTAL	2080	4558	2.19 du/ac

NOTES:

1. Densities indicated are maximum densities allowed and are to be applied to gross unit (pod) acreage, including conservation areas and open space within those pods. The total number of dwelling units allowed for any unit (pod), may be clustered and the open space, retention/detention and/or conservation area within the unit (pod) used in the density calculation.

2. In subdivisions where estate lots are provided, bridle path easements may be allowed as may the keeping of horses where lot sizes are a minimum of 1.5 acres. "Horses" (including horses, ponies, mules, donkeys and other animals used for riding) shall be allowed at a density of 1 horse per acre. Any such designated unit shall also allow stable facilities at a maximum density of one (1) stall per acre. All such designated units shall be completely fenced along all property lines to the standards set forth in the unit deed restrictions. When horses are fed by grazing on pasture, there shall be one hundred thousand (100,000) square feet of pasture per horse if a single pasture is provided, or eighty thousand (80,000) square feet of pasture per horse, if two pasture areas are rotated. When horses are not pastured, but are fed indoors or in a dry lot, no minimum pasture area per horse shall be required.

The following minimum setbacks shall be provided: stables, corrals and piles of manure, feed and bedding shall be located seventy-five (75) feet from any street or non-residential lot line, fifty (50) feet from any neighboring residential lot line, one hundred (100) feet form any residence and seventy-five (75) feet from any neighboring land use (either existing or proposed), other than conservation or open space in order to minimize odor and nuisance problems. Pasture may extend to the lot line; however, when all of the runoff from a corral or exercise area is controlled and directed over a one hundred (100) foot long grass swale before reaching the property line, the corral or un-vegetated exercise area may be located a minimum of forty (40) feet from any street or lot line. Manure piles shall be stored, removed and/or applied in accordance with Hillsborough County Health Department regulations; however, manure shall not be applied on land that is closer than one hundred (100) feet to a residential lot line.

A one hundred (100) foot wide area of vegetation cover, exclusive of pasture area, shall be maintained between any corral, un-vegetated exercise area, manure pile, or application area and any surface water or well, in order to minimize runoff, prevent erosion, and promote quick nitrogen absorption. Corral, un-vegetated exercise areas, manure piles, and manure application are prohibited in areas with slopes greater than five (5%) percent, in ten (10) year floodplains, in waterways and on soils classified as very poorly drained by the Soil Conservation Service Soil Survey for Hillsborough County, Florida. Manure shall not be allowed closer than seventy five (75) feet to a well or to any surface water, unless the water is upgraded or there is adequate diking to comply with Hillsborough County Health Department and all other jurisdictional standards.

In lieu of providing land for a fire station site within this CU, the Developer shall pay to the City of Plant City $25,000 on the effective date of the ordinance approving the 1989-1990 CU modification. Further, the Developer, his successors or assigns, shall pay to the City an additional $100,000 on or before the first business day of June 1992.

Mindedahl Road shall be vacated prior to the development of any subsection of Unit 33 which includes or lies immediately adjacent to its R.O.W.

Access to Units 15 & 42 from Alexander Street shall be restricted to existing median cuts.

Platted Units

Unit No.	Platted name, page and plat book number	Units	Acres	Referenced Name
1	Walden Lake Subdivision, Unit 1, Page 92, Plat Book 45	275	97.02	Eastgate
2	Walden Lake Fairway Estates, Page 14, Plat Book 48	28	20.51	Fairway estates
3	Walden Lake Fairway Villas, page 18, Plat Book 50	40	9.71	Fairway Villas
4	Woodfield Village Unit 1, Page 15, Plat Book 48	21	6.53	Woodfield
5	Woodfield Village Unit 2, Page 34, Plat Book 49	47	14.89	Woodfield
6	Walden Lake Fairway Villas Unit II, page 36, Plat Book 51	38	10.10	Fairway Villas
7	Walden Lake Fairway Estates Unit II, Page 19, Plat Book 52	21	12.42	Fairway Woods
9	Eastgate Extension, Page 19, Plat Book 52	58	21.81	Gatewood
11 A	Walden Lake Unit II-A, Page 42, Plat Book 48	4	2.67	Fairway Woods
11 B	Walden Lake Unit 11-B, Page 43, Plat Book 48	14	9.81	Fairway Woods
13	Walden Lake Unit 13, Page 24, Plat Book 53	42	11.12	Village Green Townhomes
14	Walden Lake Unit 14, Page 20, Plat Book 54	26	14.99	Wedgewood
16	Woodfield Village unit III, Page 20, Plat Book 52	20	6.33	Redbud Circle
17	Walden Lake Unit 17, Page 6, Plat Book 54, Page 20, Plat Book 59	35	10.63	Walden Place
18	Walden Lake Unit 18, Page 32, Plat Book 61	22	19.45	Tanglewood
20	Walden Lake Unit 20, Page 43, Plat Book 56	112	48.2	Hammocks
24	Walden Lake Unit 24-A, Page 50-52, Plat Book 53	86	56.88	Paddocks
	The Paddocks Phase II, Page 43, Plat Book 57	47	17.00	Paddocks
	The Paddocks Phase III, Page 26, Plat Book 58	39	12.21	Paddocks
25	Walden Lake Unit 25, Page 36, Plat Book 61	19	8.37	Walden Trace
26	Walden Lake Unit 26, Page , Plat Book	122	60.03	Forest Club
30	Walden Lake Unit 30 Phase I Sect. A, Page 15, Plat Bk. 62	12		Westwood
	Walden Lake Unit 30 Phase I Sect. B, Page 16, Plat Bk. 62	26		Westwood
	Walden Lake Unit 30 Phase I Sect. D, Page 17, Plat Bk. 62	142		Westwood
34	Walden Lake Unit 34/35, Page 37, Plat Book 61	16	37.0	Polo Place
30	Walden Lake Unit 30 Phase 1 Section C Page 24 Plat Book 67	32	Total	Westwood
30	Walden Lake Unit 30 Phase 2 Section A Page 38 Plat Book 66	17	Unit 30	Parkwood
30	Walden Lake Unit 30 Phase 2 Section B Page 39 Plat Book 66	12	138	Parkwood
30	Walden Lake Unit 30 Phase 3 Section A Page 40 Plat Book 66	12		Parkwood
27	Walden Lake Unit 27 Phase 1 Page 37 Plat Book 66	82	35.01	Aston woods
30	Walden Lake Unit 30 Phase II Section C Page 12 Plat Book 68	112		Parkwood
30	Walden Lake Unit 30 Phase III Section B Page 13 Plat Book 68	43		Parkwood
55	Walden Lake Unit 55 Page 2, Plat Book 69	9	16.67	Industrial Park

Definitions of use types as follows:

Single Family - Units which shall be detached single family residences including, but not limited to zero lot line patio homes and estate lots (see note #2).

Multi Family - refers to structures designed to serve as residences for two (2) or more families including, but not limited to garden apartments, condominiums, townhomes and duplexes.

Commercial - as defined for specific unit.

Industrial - as defined for specific unit.

School - as described in general guidelines.

Specific Unit Notes

Unit 2 (Fairway Estates) -Single Family. Minimum setbacks shall be 25' front, 30' rear, and 7.5' for side yards.

Unit 8 - Multi Family, (+/-) 12 acres, 144 units maximum, 12 units per acre maximum. Minimum setbacks shall be 30' front, side and rear. Maximum height shall be 60'. Parking spaces shall be provided at 1.8 spaces per unit minimum.

Unit 10 - Multi Family, + 27 acres, 162 units maximum, 6 units per acre maximum. Minimum setbacks shall be 20' front and rear yards, 10' side yards. Maximum building height shall be 45'. Parking spaces shall be provided at 1.8 spaces per unit minimum.

Unit 11A & Unit 11B - Single Family. Minimum setbacks shall be 25' front, 30' rear, and 10' for side yards.

Unit 14 - (Wedgewood) - Single Family. Minimum setbacks shall be 25' front, 30' rear, and 10' for side yards.

Unit 15 - Multi Family, 70 acres, 665 units maximum, 9.5 units/acre maximum. Setbacks shall be: Front - 25', Rear - 60' between bldgs or 40' from R.O.W., side - 40' between bldgs. or 25' from R.O.W. 65' max. bldg. height, 2 parking spaces per unit. Primary entrance on Airport Road.

Unit 15B - (Charleston Woods) - Single Family. Minimum setbacks shall be 25' front, 30' rear, and 10' for side yards.

Unit 18 - (Tanglewood) - Single Family. Minimum setbacks shall be 25' front, 30' rear, and 10' for side yards.

Unit 19 - Single Family; (+/-) 27.5 acres; 83 lots; 3 units per acre maximum. Minimum setbacks shall be 25' front, 30' rear, and 10' side yard. Maximum building height shall be 28'.

Unit 20 - (Hammocks) - Single Family. Minimum setbacks shall be 25' front, 30' rear, and 10' for side yards.

Unit 22 - Multi Family, (+/-) 20 acres, 165 units maximum, 8.25 units maximum per acre. Minimum setbacks shall be 10' side yards, 20' front and rear yards. Maximum building heights shall be 45'. Parking spaces shall be provided at 1.8 spaces per unit minimum.

Unit 23 - Single Family (+/-) 37 acres, 130 units maximum, 35 units maximum per acre. Minimum setbacks shall be 25' front and 30' rear, and 10' side yard setbacks. Maximum building height shall be 28'.

Unit 24 - (Paddocks, including Phases 2 & 3) - Single Family. Minimum setbacks shall be 25' front, 30' rear, and 7.5' for side yards.

Unit 26 - (Forest Club) - Single Family. Minimum setbacks shall be 25' front, 30' rear. Side yard setbacks to be 10' on one side of structure and 12' on other side of structure so that there is a minimum of 22' between structures.

Specific Unit Notes
Continued

Unit 27 - Single Family (+/-) 76 acres, 239 units maximum, 3.15 u nits per acre maximum. Minimum setbacks shall be 10' side, 25' front and 30' rear. Maximum building height shall be 28'.

Unit 28 - Single Family, (+/-) 31 acres, 46 lots, 1.48 units per acre maximum. Minimum setbacks shall be 10' side, 25' front and 30' rear. Maximum building height shall be 28'.

Unit 29 - Multi Family, (+/-) 34 acres, 306 units maximum, 9 units maximum per acre. Minimum setbacks shall be 20' front, 20' rear, 10' side yards. Maximum building height shall be 45'. Parking spaces shall be provided at 1.8 spaces per unit, minimum.

Unit 33 - Single Family, (+/-) 177.5 acres, 500 units maximum, 2.8 units per acre. Minimum setbacks shall be 10' side yards, 25' setback for front and 30' rear yards. Maximum building height shall be 28'.

Unit 33-2A - Setback remains as per detailed site plan and preliminary plat.

Unit 36 - Multi-Family, (+/-) 58 acres, 313 unit maximum, 5.4 units per acre maximum. Minimum setbacks shall be 25' front, 30' rear unless abutting a street right-of-way where the rear yard shall be 40', and 20' side unless abutting a street right-of-way where the side setback shall be 25'. Parking spaces shall be provided at a minimum of 2.0 spaces per unit.

Unit 37 - Single Family/Zero Lot Line, (+/-) 30 acres, 105 units maximum, 3.5 units per acre maximum. Minimum setbacks shall be 10' to one side, 0' to other, 25' setbacks for front and 20' rear yards. Maximum building height shall be 28'.

Unit 41 - Commercial, (+/-) 4.5 acres. Total square footage of retail space (as defined in Plant City Code) shall not exceed 10,000 square feet per acre. Uses shall be limited to those uses which have as their major function the sale of convenience goods and personal services, serving the residents and workers in the surrounding area.

Unit 42 - Neighborhood Commercial, (+/-) 16 acres. Total square footage of retail space (as defined in Plant City Code) shall not exceed 10,000 square feet per acre. Uses shall be limited to those uses which have as their major function the sale of convenience goods and personal services, serving the residents and workers in the surrounding area.

Unit 44 - Office/Commercial/Residential, (+/-) 10 acres, Commercial uses shall be limited to those uses which have as their major function the sale of convenience goods and personal services, serving the residents and workers in the surrounding area. Total square footage of retail space (as defined in the Plant City Code) shall be limited to 10,000 square feet per acre. Residential uses shall be limited to 62 town homes. Maximum uses whether commercial and/or residential shall not exceed 5,000 average daily trips (ADT.)

Unit 55 - Light Industrial, (+/-) 39 acres. As per detailed site plan and preliminary plat.

Unit 56A - Light Industrial (+/-) 8.1 acres. As per detailed site plan and preliminary plat.

Unit 56B - (+/-) 6.4 acres limited to 42 town homes. Development of 56B will be as per detailed site plan/preliminary plat as well as the attched noise Mitigation Plan.

(A) Physical Barrier at the Northern Property Boundary: Prior to the issuance of the First Certificate of Occupancy, a sound barrier wall shall be constructed of concrete from grade level to a height of 20 feet above M & N Plastics, Inc. ("M & N") parking slab elevation, to be positioned beginning 50 feet east of M & N's building southwest corner, and extending uninterrupted to the west along the Property's north boundary to a point not less than 100 feet east of Turkey Creek Drive eastern right-of-way line. The wall will be constructed within 5 feet of the M & N south property line with a berm or other landscaping features applied to the south side only. The wall/berm will be reduced to 12 feet in combined height from the point 100 feet east of Turkey Creek Road to the right-of-way line. Notwithstanding the wall/berm will be constructed in accordance with any City traffic sign obstruction requirements.

A new separate homeowners' association shall be established for Units 56B and 44 which shall be responsible for the maintenance of the barrier wall/berm. Plant materials shall be planted on the south side of the wall, in no less than a 4'-wide buffer strip. The wall landscaping shall meet the opacity standard of Section 102-1373 (1)b and (2). A vinyl privacy fence, no less than 6' high, shall be extended from the eastern end of the sound-barrier wall eastward to the lake/east property line. An exterior water fountain or similar water feature shall be placed near the most northern dwelling units. The new separate homeowners' association shall be responsible for maintaining the water feature in operational condition.

(B) Site design and Layout: The closest point of any habitable structure to the north property line will be no less than 70 feet south of the South property line of M & N. The closest habitable structures will be oriented with their sides toward the South property line of M & N. The layout of all habitable structures shall be such as to mitigate any noise level standard exceedances, at each structures location on the site, to the maximum extent practicable and feasible. For example, side walls shall be facing north and related outside amenities shall be located on the southerly sides or backs of residential structures.

(C) Construction Techniques: All habitable structures shall be designed and constructed of materials and in a manner to minimize any noise level standard exceedances at the location of that habitable structure, to the maximum extent practicable and feasible. Any penetrations to the northern sidewall of the closest habitable structure's to the North property line shall be fixed and dual pane sound rated windows, or otherwise designed to not admit sounds of an intensity exceeding the levels established in the various controlling regulations. South rated windows shall have an STC rating of 35 db to 40 db, according to tests conducted in accordance with ASTM E90-90 in a National Volunteer Laboratory Accreditation Program certified acoustical laboratory. The sidewall of the closest habitable structures to the North property line shall be full height concrete and mortar wall.

Notes: May - August 1988 Revision to CU Zoning

The extension of Griffin Blvd. to Turkey Creek Road shall be concurrent with the submittal of the Fina Plat of Unit 19.I

The extension of Charlie Griffin Road to Mud Lake Road shall be concurrent with the submittal of the final Plat of Unit 29 or Unit 36, whichever comes first.

The extension of Timberlane Drive to Trapnell Road shall be concurrent with the submittal of the Final Plat of Unit 33-3 or Unit 33-4, whichever comes first.

REVISED: MARCH 25, 1988
REVISED: JANUARY 31, 1989
REVISED: NOVEMBER 29, 1989
REVISED: MARCH 13, 2006
REVISED: JUNE 26, 2006
REVISED: APRIL 12, 2010 (ORD. 11-2010)

1. UNIT 61 - Assisted Living Facility 10.41 acres, the number of units shall be no more than 60 units with kitchens or 121 units without kitchens or combination thereof and shall be consistent with the density and setbacks set forth in the R-2 requirements applicable to Assisted Living Facilities in Division 6 of Article IV of Chapter 102 of the Plant City Code of Ordinances. Maximu building height shall be 35' however only two livable floors shall be permitted within the 35' heigh In keeping with the residential character, rooflines shall be pitched and/or gabled. Parking and circulation shall be consistent with Division 11 of Article VII of Chapter 102 of the Plant City Code of Ordinances. The exterior shall be consistent with specifications set forth in the R-2 requireme applicable to Assisted Living Facilities in Division 6 of Article IV of Chapter 102 of the Plant City Code of Ordinances. The development shall be oriented so that service entrances are located o the north and west sides of the Unit. A minimum 30 foot landscaped buffer will be provided along the eastern, western and northern property lines of the Unit. The cross-section of the buffer(s) w be to the minimum specifications detailed in Example #1 or #2. Project freestanding signage sha be located at the project entrance on Clubhouse Drive and meet the design and size standards the City Code established for multi-family projects.

2. UNIT 62 - Multi-Family 54.83 acres, 156 units maximum, multi-family setbacks and building separations shall be consistent with Section 102-445, as amended. Development shall include townhome and/or duplex forms of development. If townhomes are developed, no more than 4 townhomes shall be grouped together in one building footprint provided however where townhomes abut condominium units in Unit 8, townhomes will be restricted to groupings of no more than 3 units per building footprint. Development may be built to a height of 35 feet but ma only contain two livable floors and must have rooflines (pitched and/or gabled) reflecting a residential character. A minimum landscaped buffer of 30 feet shall be provided where the Unit abuts existing residences or existing road ROW. This buffer shall be maintained by the HOA(s) a Condominium Association(s) formed for Unit 62. The cross-section of the buffer(s) between newe and existing development will be to the minimum specifications detailed in Example #1 or #2. A minimum 10' wide buffer consisting of walls, fencing and/or landscaping shall be provided betwe Unit 62 and Unit 63.

3. UNIT 63 - Single Family 61.86 acres, 146 lots maximum, minimum setbacks shall be 25' fron 30' rear, 10' side yards, 20' street side-yard setback. Development shall have a minimum lot size of 10,000 square feet and a minimum lot width of 85 feet. Development may be built to a height 28 feet but shall contain no more than two livable floors and must have rooflines (pitched and/or gabled) reflecting a residential character. A minimum landscaped buffer of 30 feet containing an earthen berm shall be provided where Unit 63 abuts existing single family residences. The cross-section of the buffer(s) between new and existing development will be to the minimum specifications detailed in Example #1 or #2. Where a new water feature abuts existing single family residences a greater separation shall be provided. Such buffer shall not be part of a platte residential lot. However, due to the significant vegetation that exists between Unit 28 and Unit 6 buffer is not required. Buffers provided shall be maintained by the HOA created by the new subdivision.

Multi-family Unit 62 contains a 5 acre park with Lake Access which will be open for use by all residents of Walden Lake Polo and Country Club. The park will be maintained by the HOA(s) an Condominium Association(s) established for the new development. The park shall be a passive park and may include playground equipment.

Final location of buildings, storm water retention areas, and ingress/egress points are subject to change pending formal agency jurisdictional determinations of wetland and other surface water boundaries, approval by the appropriate regulatory agencies and design of improvements. All roadway alignments and access points are conceptual and subject to design and permitting.

The provision of potable water, wastewater as well as reclaimed water improvements shall be provided by the developer, subject to the approval of the Utilities Director.

Approval of this PD zoning Modification by Plant City does not constitute a guarantee that the Environmental Protection Commission approvals/permits necessary for the development as proposed will be issued, does not itself serve to justify any impact to wetlands, and does not gra any implied or vested right to environmental approvals.

The construction and location of any proposed wetland impacts are not approved but shall be reviewed by EPC staff under separate cover pursuant to Chapter 1-11, Wetlands, Rules of the EPC, to determine whether such impacts are necessary to accomplish reasonable use of the subject property.

Prior to the issuance of any building or land alteration permits or other development, the approv wetland / OSW line must be incorporated into the site plan. The wetland/OSW line must appea on all site plans, labeled as "EPC Wetland Line", and the wetland must be labeled as "Wetland Conservation Area."

The applicant/property owner agrees to convey a conservation easement to the EPC over the remaining wetlands after the final site development has been determined and the final approve wetland impacts have been authorized for the site.

DEVELOPMENT REQUIREMENTS

torm Retention and Drainage

Storm water, drainage and retention requirements shall meet the specifications of the approved Walden Lake Master Drainage Plan on file with the Plant city Engineering Office.

nvironmentally Sensitive, Recreations and Open Space Areas

Potential environmentally sensitive lands have been identified based on the locations of hydric soils as shown on the soils map and is incorporated in this development approval by reference. The wetlands which have been shown on the master development plan as conservation areas may not constitute the full extent of the development's wetlands system. Therefore, development in any hydric soils area will require pre - development EPC and/or DER inspection and staking of any jurisdictional areas identified by the appropriate regulatory agencies. When wetlands are identified on or adjacent to a development site, they shall be labeled as "conservation areas" on the detailed site plan and subdivision plats (when applicable). Individual site plans shall conform to all applicable rules and regulations that may be imposed by the appropriate jurisdictional agencies, and the City of Plant City, including required setbacks from areas determined to be wetlands. Identified wetlands shall remain undisturbed during and following development.

Wetlands and wetland setback areas may be used for stormwater management systems or construction of minor recreational improvements, such as elevated boardwalks, unpaved bridle trails, overlook parks, and other similar recreational amenities which do not require the use of impervious surfaces. Conservation areas may be used as unimproved, passive recreational areas.

Shorelines of naturally occurring water bodies shall be planted with native wetlands vegetation.

Parks and open spaces that serve the entire development will remain private and will be deeded to the Master Homeowners Association, which will be responsible for their upkeep and maintenance.

Individual subdivision sidewalk requirements have been met with the existing and proposed bike path/jogging trail network in the approved CU plan. Bridle path easements in appropriate subdivisions shall be tied together by bridle paths through wetlands setback and other open space areas. Bridle paths shall be maintained in an unpaved condition and shall be developed independently of bicycle trails.

Certain temporary agricultural or recreation uses shall be allowed on any undeveloped portion of the Community Unit. Uses allowed shall include cattle and horse grazing, stables/tack shop, small scale farming and horse trails, unpaved recreational fields and the like. All pasture and farming uses shall be subject to the standards for keeping of livestock on estate lots as described in the conditions of approval.

7. Individual unit recreation and open space requirements have generally been met within the overall CU plan through provisions of open space, recreation, golf course and conservation areas. Each subdivision will be provided access to active and passive recreation areas within Walden Lake by extension of the existing and proposed bike path system. Bike paths will be extended to new subdivisions as they are developed and will interconnect with the entire bike path network. The bike path network will be constructed in such a manner as to create minimal traffic conflicts with major arterial roads, any crossing of such roads will be provided with adequate safety measures.

Public Facilities and Utilities

1. Sewer and water requirements shall meet the specifications of the approved Walden Lake Master Sewer Collection and Waste Distribution Plan and Systems Calculations (dated May 4, 1982) on file with the Plant City Engineering office. All development within the project shall be served by Plant City Sewer and Water.

2. As per agreement between Walden Lake, Inc., and the Hillsborough County Public School System and required by the City of Plant City, Walden Lake, Inc., will provide three (3) school sites as shown on the general plan. Specifically, two (2) elementary school sites of at least 15 acres each in size and one (1) middle school site of at least 25 acres in size shall be deeded to the school board within 180 days of notice by the school board that the threshold of Walden Lake's population requires use of the site. This threshold shall be determined as per the criteria used by the school board at that time. These school sites will be deeded to the school board for the purpose of classroom facilities to be constructed on the site which will primarily service the needs of the Walden Lake development. School construction shall commence on the designated sites no less than 5 years after Walden Lake's population warrants their need.

If a classroom facility has not been started within that time, the property will revert back to Walden Lake, Inc. ownership and in the case of Units 65 and 66, be developed into active recreational facilities for the residents of Walden Lake. In either event, these sites must be connected to the bike path network.

3. Walden Lake reserves the right of site and architectural approval of all facilities constructed, but will not unreasonably withhold this approval.

4. If the School needs thresholds as set by the school board are not reached by Walden Lake's population at buildout for unit #67, or the school board declines use of this site, it shall revert to a single family detached designation at a maximum density of 5 units/acre.

General Site Development Requirements

1. The overall Community Unit total project density shall not exceed 5.0 units/acre.

2. In units where the final surveyed acreage is greater or less than shown on the plan, the total number of units may be adjusted to the number allowed as per the approved density multiplied by actual number of acres, provided this does not exceed the overall Community Unit density of 5 units per acre.

3. Adequate buffer areas as defined in Chapter 111, Section 111.19 of the Plant City code shall be constructed between all dissimilar uses, provided, however, that existing natural vegetation may be credited by the planning staff towards fulfillment of all or part of the buffering requirements.

4. Setbacks and maximum building heights shall be applied as delineated on the master site plan by unit.

5. Modular offices for real estate sales shall be allowed as a temporary use in residential subdivisions. Such offices shall be limited to one per residential subdivision and use as a residence is prohibited. Sales offices shall be removed upon completion of lot sales in that subdivision.
Notes: (Sept. - Dec. '87 Revision to CU Zoning)

6. Acceleration/deceleration lanes shall be provided by the developer as approved by the City Engineer.

7. A lift station shall be provided by the developer. Requirements shall be in accordance with the City's standards and approved by the City Engineer.

8. Fire hydrants shall be provided by the developer as required by the City's Fire Chief.

9. Buffering shall be provided to separate the commercial from the residential uses, and along the Alexander Street right of way.

10. All areas delineated as a "conservation area" by the appropriate regulating agency shall be protected and not disturbed during pre and post construction activities.

11. The developers of Walden Lake agree to pay the development's proportionate share of any signalization required south of Grant Street including the Mendonsa intersection along Alexander Street identified by a traffic study completed by Plant City or the developer. Payment shall be upon completion of final engineering and scheduling of the specific improvements for construction by the City of Plant City.

1 30' BUFFER WITH LANDSCAPE BERM EXAMPLE

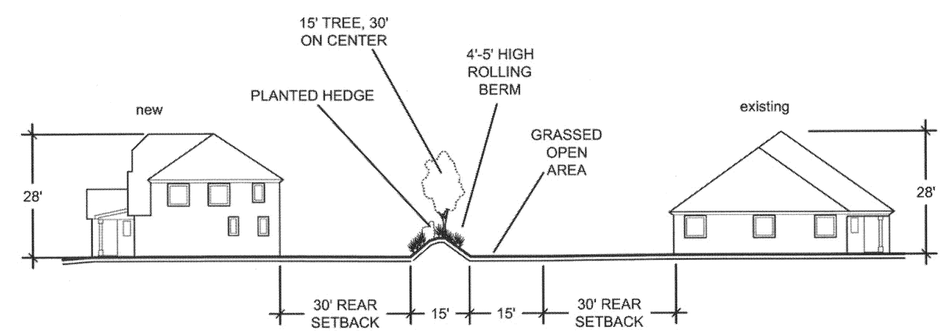

BUFFER EXAMPLES 1 & 2
APPLICABLE TO UNITS
61, 62, 63 ONLY

2 WATER FEATURE BUFFER EXAMPLE

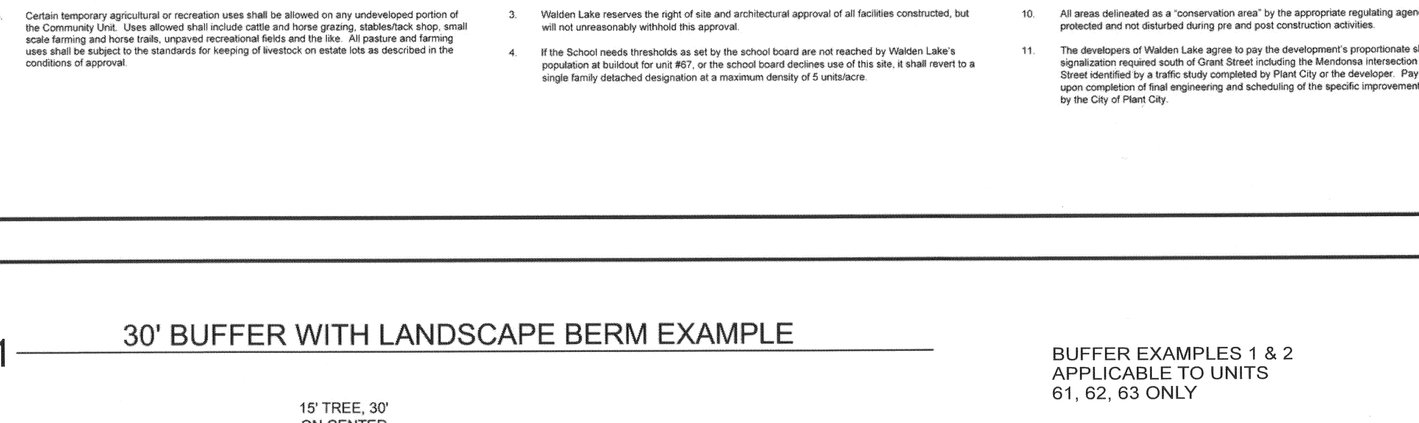

RECEIVED
FEB - 4 2016
CITY OF PLANT CITY
PLANNING & ZONING